OPPLE

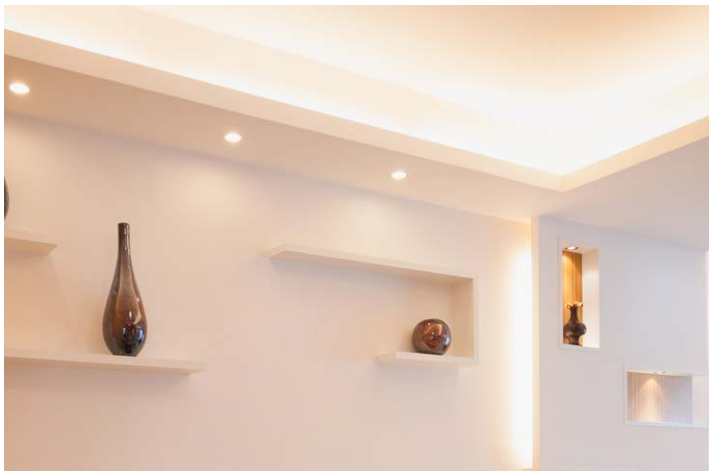

LED Reflector EcoMax GU10

Features

- Full retrofit of existing halogen GU10 lamps
- No UV/IR radiation
- Significantly longer lifespan than traditional halogen bulbs
- See appendix 1 for dimmer compatibility list

Benefits

- No UV/IR radiation, reducing risk of damaging goods
- Significantly less heat production than halogen, avoiding discolouration and risk of damaging goods
- Up to 87% lower energy consumption than halogen
- Reduced maintenance costs

Application

Office
Retail
Hotel
Medical
Airport

Specifications

Item Code	Item Description	Voltage (V)	Equivalent to (W)	Power (W)	Lumen	Efficacy (lm/W)	Input Current	CRI	CCT (K)	Life-span (L70B50)	Weight	Energy level	EAN1	Gross Price
140044674	LED E GU10 2W 2700K 36D CT	220-240	Halogen 20W	2	150	75	17mA	≥80	2700	15,000	35	A++	6956712667021	
140044675	LED E GU10 5W 2700K 36D CT	220-240	Halogen 35W	5	350	70	40mA	≥80	2700	15,000	47	A+	6956712667038	
140044676	LED E GU10 6.5W 2700K 36D CT	220-240	Halogen 50W	6,5	450	69	51mA	≥80	2700	15,000	49	A+	6956712667045	
140048605	LED-E-GU10-5.5W-2700K-36D-DIM-CT	220-240	Halogen 35W	5,5	350	66	28mA	≥80	2700	15,000	56	A+	6956712628060	
140048606	LED-E-GU10-6.5W-2700K-36D-DIM-CT	220-240	Halogen 50W	6,5	450	69	32mA	≥80	2700	15,000	57	A+	6956712628084	

Technical Specifications	
AC / DC	AC
Frequency (Hz)	50 / 60
On / Off cycles	50,000
Beam angle (°)	36
Dimmable	No / Yes (Triac)
Operating temperature	-20 ~ +40°C
Lamp colour of finish	White
CBCP (cd)	350 / 800 / 1100
Application temperature	25°C
Storage temperature	-25 ~ +50°C

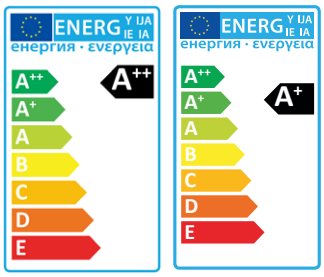

Packaging information

Item		Single box (1pc/box)			Outer box (10pcs/box)		
Item Code	Item Description	Dimensions (mm) (HxWxL)	Gross Weight (kg)	EAN1	Dimensions (mm) (HxWxL)	Gross Weight (kg)	EAN2
140044674	LED E GU10 2W 2700K 36D CT	64x52x52	0,04	6956712667021	74x112x270	0,6	6956712631275
140044675	LED E GU10 5W 2700K 36D CT	64x52x52	0,06	6956712667038	74x112x270	0,7	6956712631282
140044676	LED E GU10 6.5W 2700K 36D CT	64x52x52	0,06	6956712667045	74x112x270	0,7	6956712631299
140048605	LED-E-GU10-5.5W-2700K-36D-DIM-CT	64x52x52	0,07	6956712628053	74x112x270	0,8	6956712631216
140048606	LED-E-GU10-6.5W-2700K-36D-DIM-CT	64x52x52	0,07	6956712628060	74x112x270	0,8	6956712631223

Dimensional Drawing

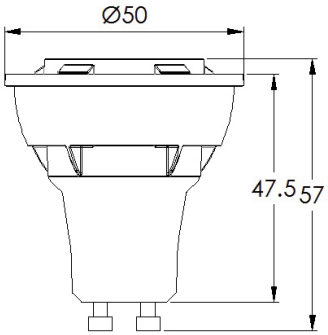

Photometric Data

LED E GU10 2W

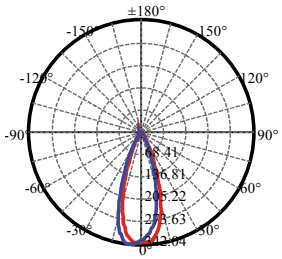

Illuminance at a Distance

	Center Beam LUX	Beam Width V	Beam Width H
2m	83.12 LUX	1.3m	1.3m
4m	20.78 LUX	2.7m	2.6m
6m	9.24 LUX	4.0m	3.9m
8m	5.20 LUX	5.4m	5.2m
10m	3.32 LUX	6.7m	6.6m
12m	2.31 LUX	8.1m	7.9m

Vert.Spread:37.3 Horiz.Spread:36.3

LED E GU10 5W

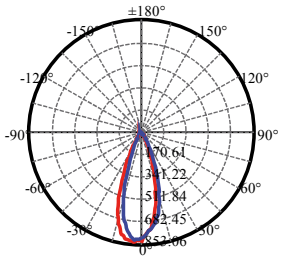

Illuminance at a Distance

	Center Beam LUX	Beam Width V	Beam Width H
2m	209.69 LUX	1.3m	1.3m
4m	52.42 LUX	2.7m	2.6m
6m	23.30 LUX	4.0m	3.9m
8m	13.11 LUX	5.3m	5.3m
10m	8.39 LUX	6.7m	6.6m
12m	5.82 LUX	8.0m	7.9m

Vert.Spread:36.8 Horiz.Spread:36.4

LED E GU10 6,5W

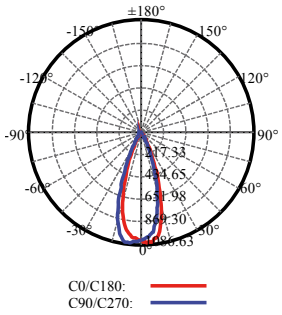

Illuminance at a Distance

	Center Beam LUX	Beam Width V	Beam Width H
2m	257.27 LUX	1.4m	1.4m
4m	64.32 LUX	2.7m	2.7m
6m	28.59 LUX	4.1m	4.1m
8m	16.08 LUX	5.4m	5.4m
10m	10.29 LUX	6.8m	6.8m
12m	7.15 LUX	8.1m	8.1m

Vert.Spread:37.4 Horiz.Spread:37.5