OPPLE

LED Ceiling Light Hera

Features

- High efficient LED light source
- Warm white light
- Diffused flickerfree light
- Easy installation

Benefits

- Energy saving up to 80 % in comparison to a traditional light source
- Uniform, diffused light, creating a pleasant atmosphere
- Long lifetime up to 20,000 hours, no bulb replacement required
- Provides instant light from the first second

Specifications

Item Code	Item Description	Power (W)	Lumen	Efficacy (lm/W)	Input Current	CRI	CCT (K)	Lifespan (L80B50)	Energy level	EAN1	Gross Price
140044133	LED HC260S 11W 2700K Hera BS CT	11	650	60	88	>80	2700	20,000	A	6956321844622	
140044134	LED HC260S 11W 2700K Hera MW CT	11	650	60	88	>80	2700	20,000	A	6956321844639	

Technical Specifications			
AC / DC	AC	Integrated driver (Yes/No)	Yes
Voltage (V)	220-240	Operating temperature	-20 ~ +40°C
Frequency (Hz)	50/60	Colour of finish	Matt White (MW), Brushed Steel (BS)
On / off cycles	50,000	Application temperature	+25°C
Beam angle (°)	115°	Storage temperature	-20 ~ +50°C
Dimmable	No		
IP	20		
Protection class	I		

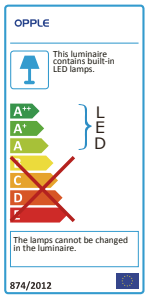

Packaging information

Item		Single box (1pc/box)			Outer box (6pc/box)		
Item Code	Item Description	Dimensions (mm) (HxWxL)	Gross Weight (kg)	EAN1	Dimensions (mm) (HxWxL)	Gross Weight (kg)	EAN2
140044133	LED HC260S 11W 2700K Hera BS CT	347x90x347	1,0	6956321844622	367x361x560	6,4	6956321851309
140044134	LED HC260S 11W 2700K Hera MW CT	347x90x347	1,0	6956321844639	367x361x560	6,4	6956321851279

Dimensional Drawing

LED HC260S

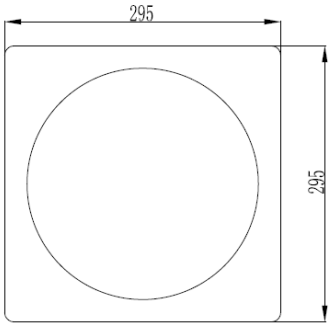

Photometric Data
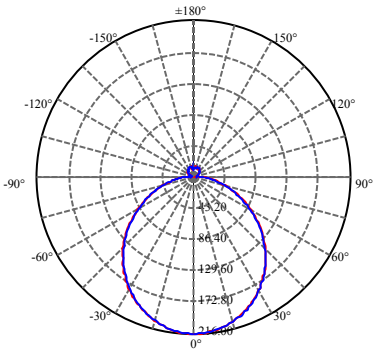
LED HC260S