OPPLE

LED Wall-Mounted EcoMax

Features

- High efficacy, replacing 2x18W CFL fixtures
- IP66 and IK10 for use in demanding usage environments
- Instant full light on
- Option for combined motion/daylight sensor (type "microwave")
- Efficient and homogenous diffusor
- Available in modern round and square designs

Benefits

- Over 60% energy savings compared to compact fluorescent
- Lowering operation cost and maintenance cost
- Well integrated in architecture and comfortable light distribution
- Easy connection and installation

Application

Parking
Gymnasium
School
Station
Medical

Specifications

Item Code	Item Description	Power (W)	Lumen	Efficacy (lm/W)	CRI	CCT (K)	UGR	Lifespan (L80B50)	EAN1	Gross Price
140051994	LEDWall-Mounted Rd300-14W-4000-WH	14	1100	85	≥ 80	4000		30,000	6956712644831	
140051995	LEDWall-Mounted Rd300-14W-4000-MD-WH	14	1100	85	≥ 80	4000		30,000	6956712644848	
140051996	LEDWall-Mounted Sq300-14W-4000-WH	14	1100	85	≥ 80	4000		30,000	6956712644855	
140051997	LEDWall-Mounted Sq300-14W-4000-MD-WH	14	1100	85	≥ 80	4000		30,000	6956712644862	
140051998	LEDWall-Mounted Rd300-14W-3000-WH	14	1000	77	≥ 80	3000		30,000	6956712644879	
140051999	LEDWall-Mounted Rd300-14W-3000-MD-WH	14	1000	77	≥ 80	3000		30,000	6956712644886	
140052000	LEDWall-Mounted Sq300-14W-3000-WH	14	1000	77	≥ 80	3000		30,000	6956712644893	
140052001	LEDWall-Mounted Sq300-14W-3000-MD-WH	14	1000	77	≥ 80	3000		30,000	6956712644909	

Emergency lighting available on request (incl. integrated 1hr battery pack)

Technical Specifications	
On-/Off-cycles	50,000
Colour consistency (SDCM)	5
Dimming	No
UGR	25
Finishing	White RAL9003
IP-grade	66
IK-grade	10
Protection class	II
Integrated driver (Yes/No)	Yes
Glow wire test (°C)	650
Driver early failure rate	1% at 5.000 hrs
Weight (kg/pc)	1.1/1.2

Electrical Supply	
Frequency (Hz)	50 / 60
Voltage (V)	220-240
AC / DC	AC

Mechanical Properties	
Housing material	Polycarbonate
Optical material	Polycarbonate

Application Conditions	
Operating temperature	-25 to +45
Application temperature	+25
Storage environment	-25 ~ +50°C

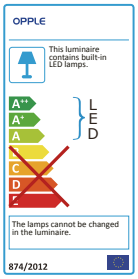

Packaging information

Item		Single box (1pc/box)			Outer box (8pc/box)		
Item Code	Item Description	Dimensions (mm) (HxWxL)	Gross Weight (kg)	EAN1	Dimensions (mm) (HxWxL)	Gross Weight (kg)	EAN2
140051994	LEDWall-Mounted Rd300-13W-4000-WH	98x304x304	1.1	6956712644831	325x625x410	9.9	6956712644916
140051995	LEDWall-Mounted Rd300-13W-4000-MD-WH	98x304x304	1.1	6956712644848	325x625x410	10.0	6956712644923
140051996	LEDWall-Mounted Sq300-13W-4000-WH	91x291x291	1.2	6956712644855	312x597x382	10.3	6956712644930
140051997	LEDWall-Mounted Sq300-13W-4000-MD-WH	91x291x291	1.2	6956712644862	312x597x382	10.5	6956712644947
140051998	LEDWall-Mounted Rd300-13W-3000-WH	98x304x304	1.1	6956712644879	325x625x410	9.9	6956712644954
140051999	LEDWall-Mounted Rd300-13W-3000-MD-WH	98x304x304	1.1	6956712644886	325x625x410	10.0	6956712644961
140052000	LEDWall-Mounted Sq300-13W-3000-WH	91x291x291	1.2	6956712644893	312x597x382	10.3	6956712644978
140052001	LEDWall-Mounted Sq300-13W-3000-MD-WH	91x291x291	1.2	6956712644909	312x597x382	10.5	6956712644985

Dimensional Drawing

LEDWall-Mounted Rd300-13W

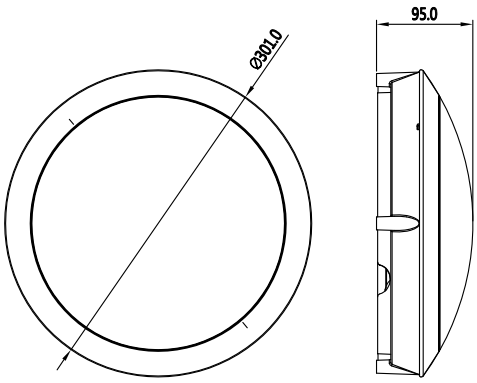

LEDWall-Mounted Sq300

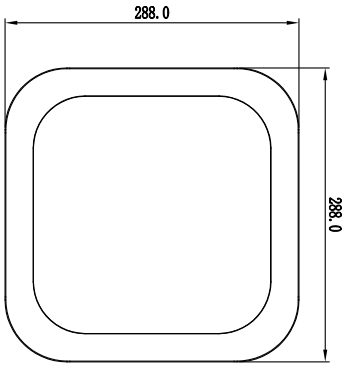

Photometric Data

LEDWall-Mounted Rd300-13W

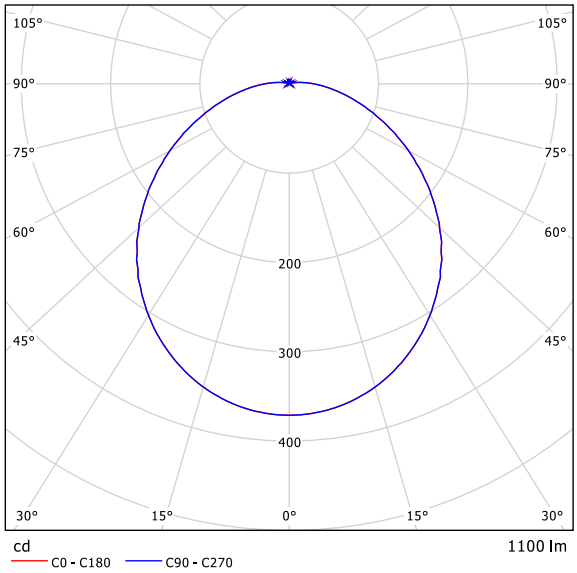
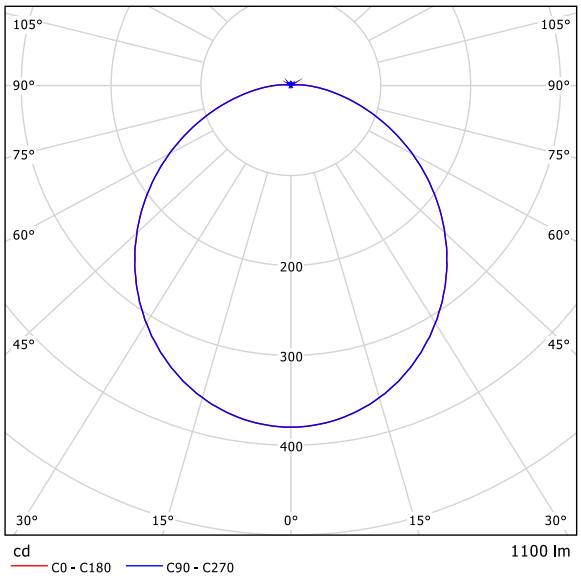
LEDWall-Mounted Sq300